HEATING INSULATION INCLUDED
Thickness: 50 mm

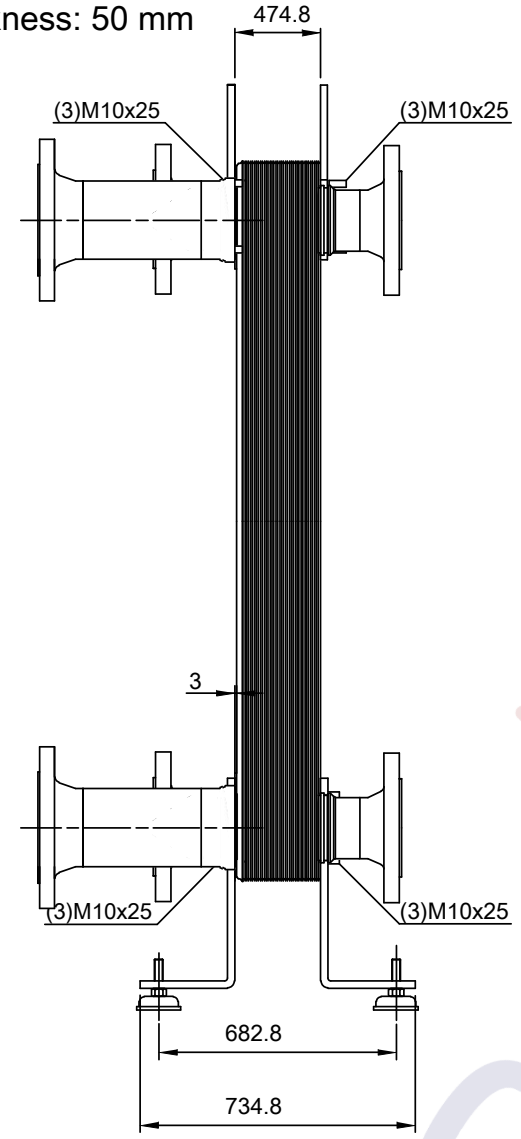

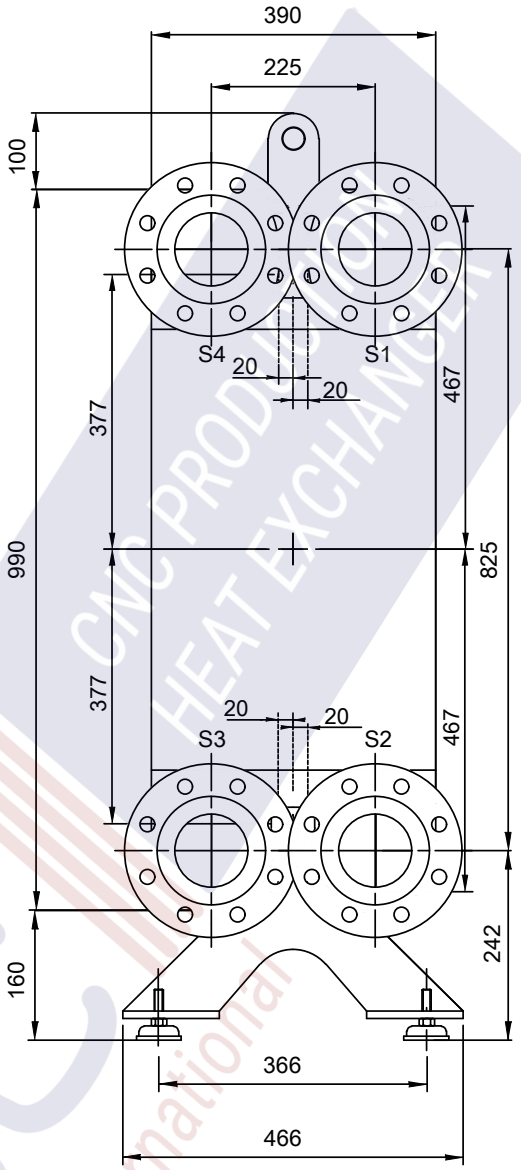

S1,S2,S3,S4 = e
T1,T2,T3,T4 = e-5
T1 T2 T3 T4 locations on back side
correspond to S1 S2 S3 S4 on front side

SIDE	MEDIA	INLET	TEMP.	OUTLET	TEMP.	FLOW RATE	PRESSURE DROP	LIQUID VOL.
1	Water	S1	°C	S2	°C	kg/h	kPa	66.6 dm³
2	Water	S3	°C	S4	°C	kg/h	kPa	65.9 dm³

ALL DIMENSIONS IN MILLIMETERS

Note that all unique customer requirements (i.e tolerance) need to be verified thru Alfa Laval.

FS17
ALLOY 316
S3,S4,T1,T2

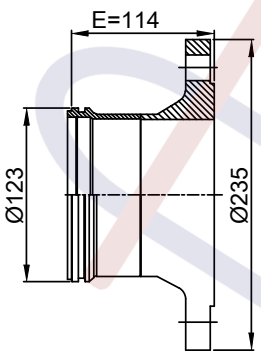

FS17 LONG
ALLOY 316
S1,S2

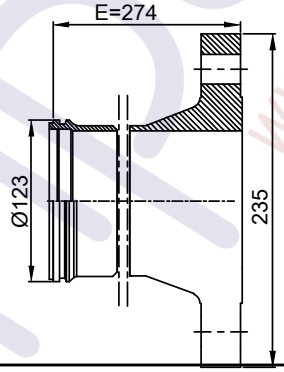

HEATING SURFACE	m²
NETWEIGHT	316.4 kg
OPERATING WEIGHT	kg
PLATE MATERIAL	ALLOY 316
PLATE GROUPING	1*89H/1*90H

PRESSURE VESSEL APPROVAL PED

CB400-180H (3075010505)

www.alfalaval.com

CUSTOMER NAME / REF. NO.

COMPANY / REF.
Aptec production s.r.o.

TOTAL LENGTH	880 mm
TOTAL WIDTH	390 mm
TOTAL HEIGHT	1250 mm

7/8/2020
REV 0

aptec CNC PRODUCTION HEAT EXCHANGER www.aptec.international